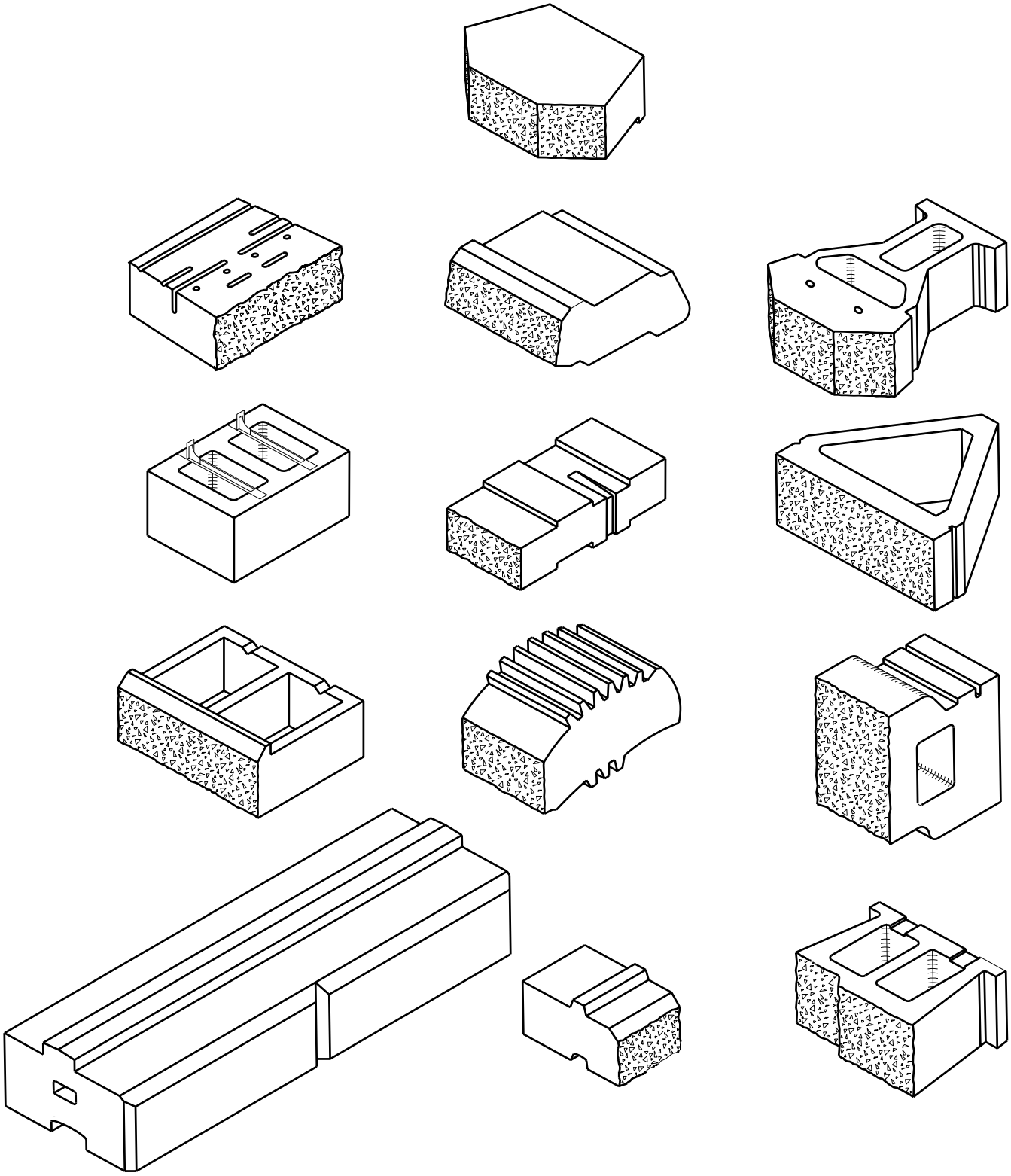

TYPES OF MODULAR BLOCKS

Figure 68-4G